elica

EN Instruction on mounting and use

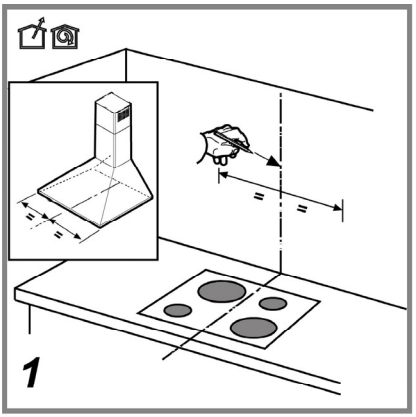
1

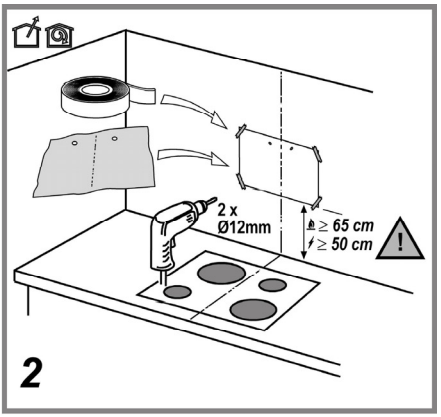
2 x
Ø12mm
≥ 65 cm
≥ 50 cm
2

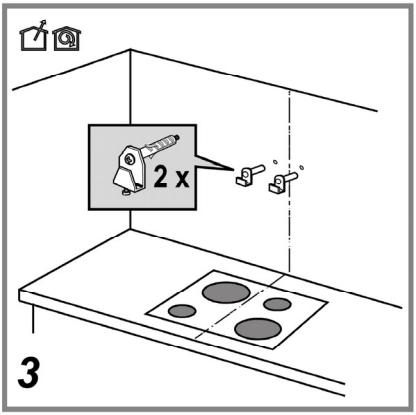
2 x
3

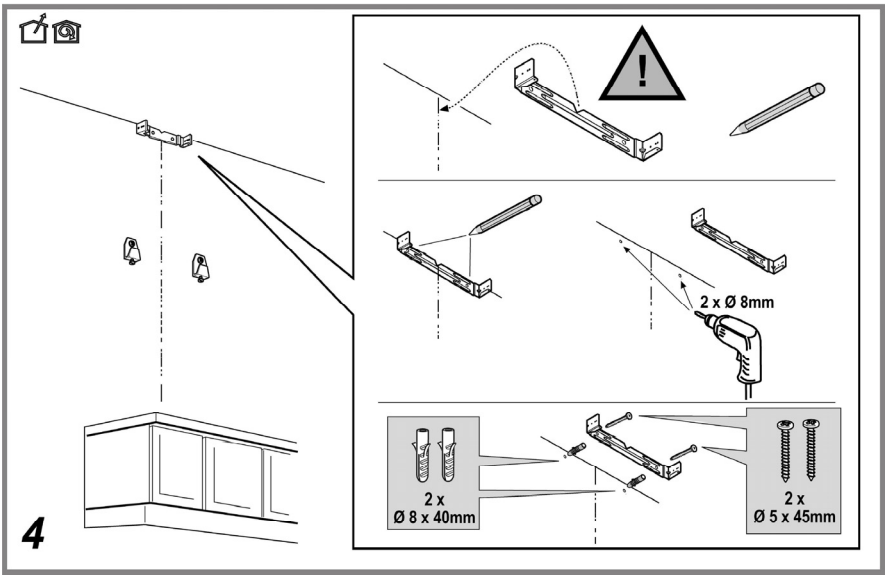
2 x Ø 8mm
2 x
Ø 8 x 40mm
2 x
Ø 5 x 45mm
4

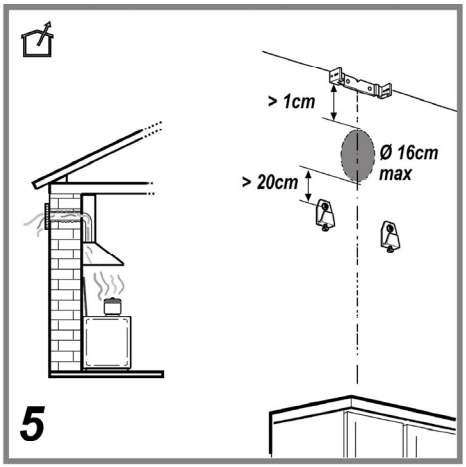
> 1cm
Ø 16cm
max
> 20cm
5

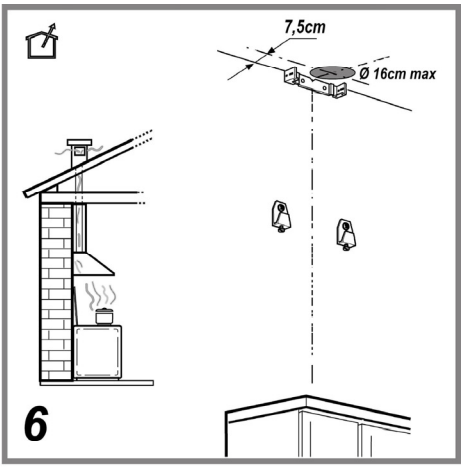
7,5cm
Ø 16cm max
6

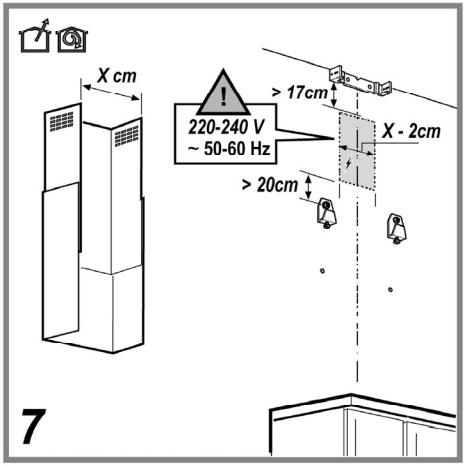
X cm
!
220-240 V
~ 50-60 Hz
> 17cm
X - 2cm
> 20cm
7

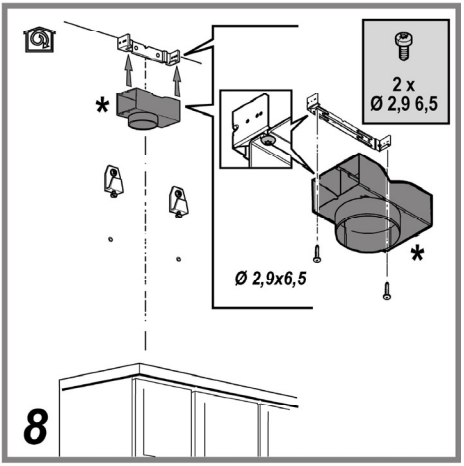
2 x
Ø 2,9 6,5
*
Ø 2,9x6,5
8

9

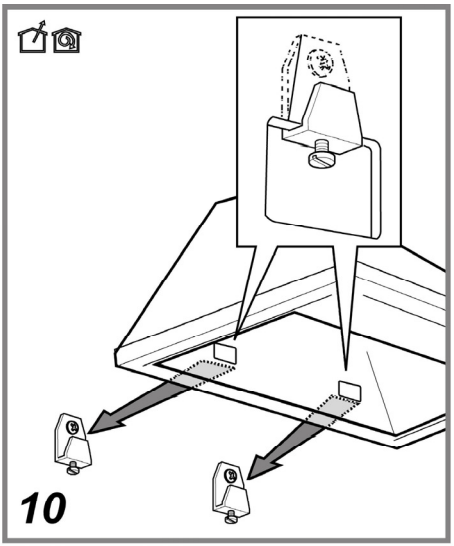
10

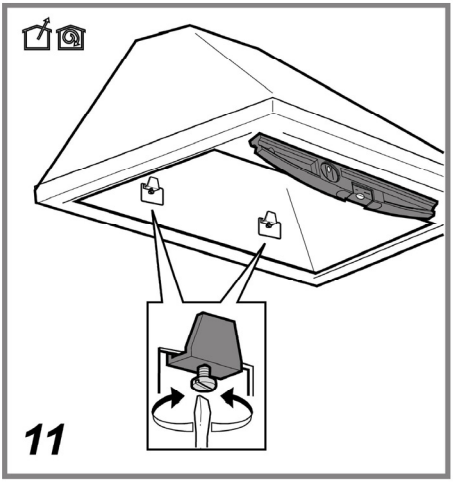
11

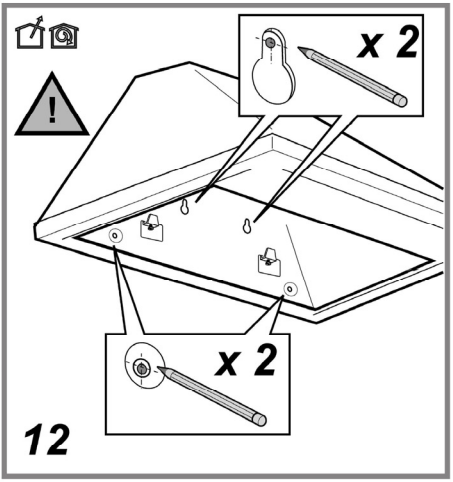
x 2
x 2
12

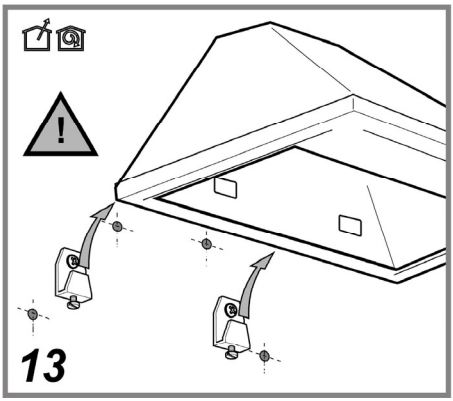
13

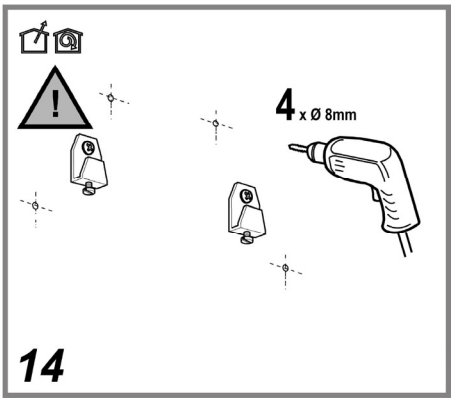
4 x Ø 8mm
14

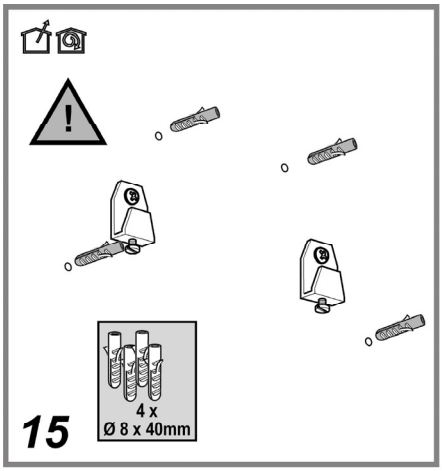
4 x
Ø 8 x 40mm
15

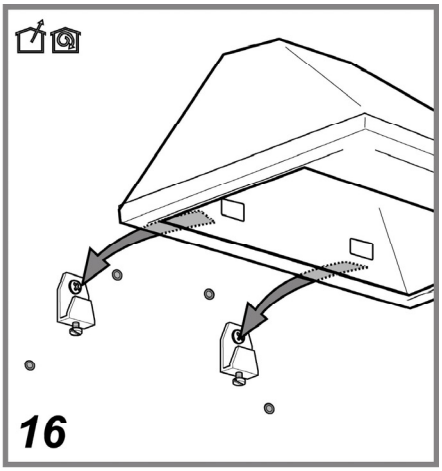
16

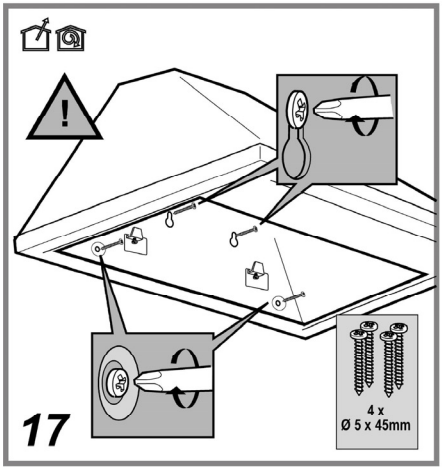
4 x
Ø 5 x 45mm
17

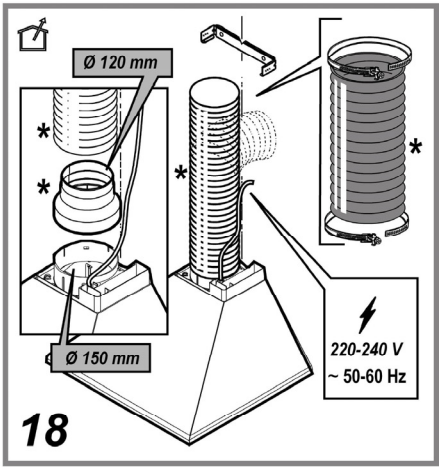
Ø 120 mm
Ø 150 mm
220-240 V
~ 50-60 Hz
18

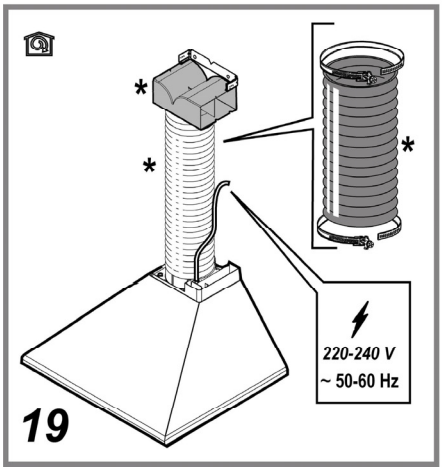
220-240 V
~ 50-60 Hz
19

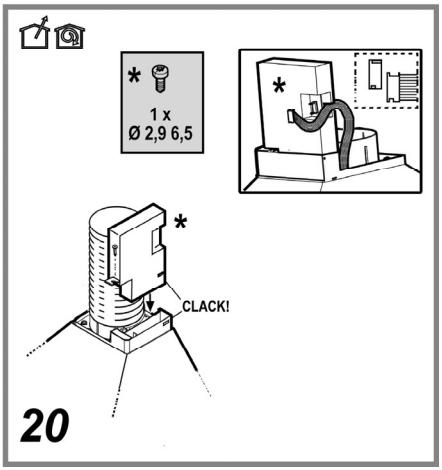
1 x
Ø 2,9 6,5
CLACK!
20

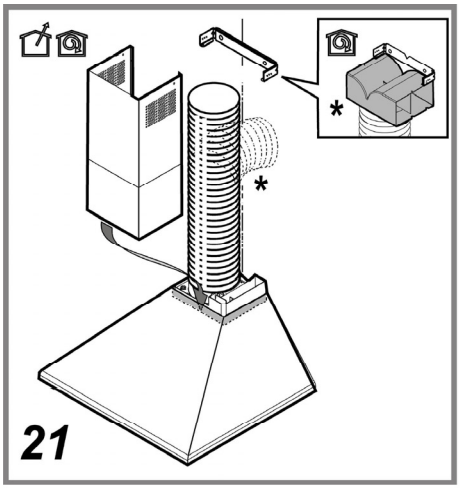
*
*
21

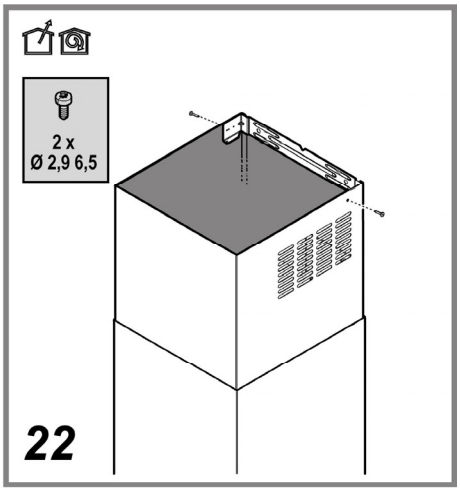
2 x
Ø 2,9 6,5
22

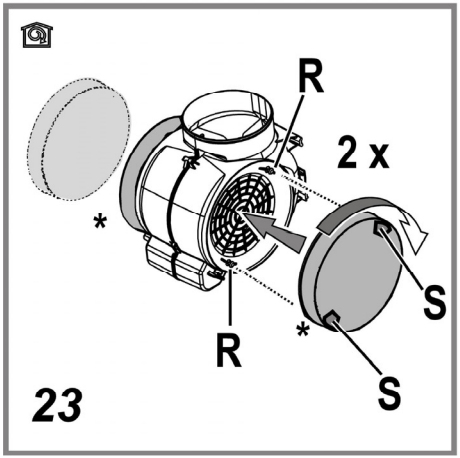
R
2 x
*
S
R
*
S
23

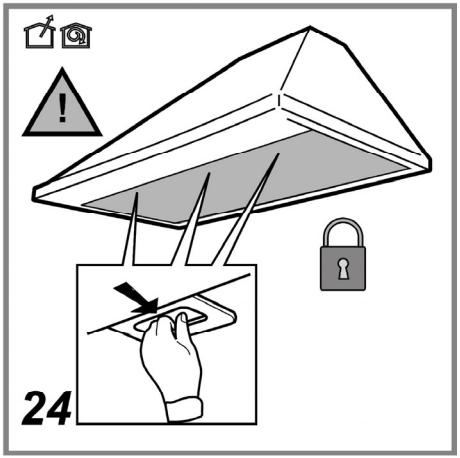
!
24

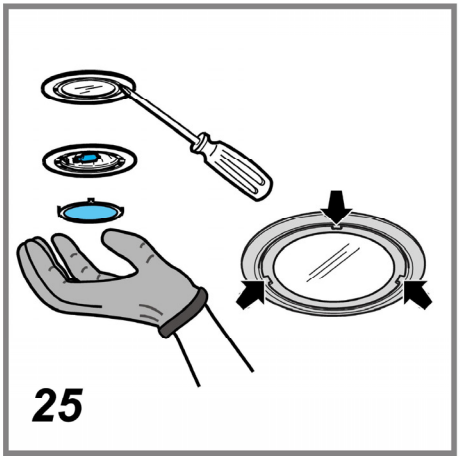
25

EN - Instruction on mounting and use

Closely follow the instructions set out in this manual. All responsibility, for any eventual inconveniences, damages or fires caused by not complying with the instructions in this manual, is declined.
The extractor hood has been designed exclusively for domestic use.
The hood can look different to that illustrated in the drawings in this booklet. The instructions for use, maintenance and installation, however, remain the same.

- **!** It is important to conserve this booklet for consultation at any moment. In the case of sale, cession or move, make sure it is together with the product.
- **!** Read the instructions carefully: there is important information about installation, use and safety.
- **!** Do not carry out electrical or mechanical variations on the product or on the discharge conduits.

Note: the elements marked with the symbol "(*)" are optional accessories supplied only with some models or elements to purchase, not supplied.

⚠ Caution

WARNING! Do not connect the appliance to the mains until the installation is fully complete.
Before any cleaning or maintenance operation, disconnect hood from the mains by removing the plug or disconnecting the mains electrical supply.
Always wear work gloves for all installation and maintenance operations.
The appliance is not intended for use by children or persons with impaired physical, sensorial or mental faculties, or if lacking in experience or knowledge, unless they are under supervision or have been trained in the use of the appliance by a person responsible for their safety.
This appliance is designed to be operated by adults, children should be monitored to ensure that they do not play with the appliance.
This appliance is designed to be operated by adults. Children should not be allowed to tamper with the controls or play with the appliance.
Never use the hood without effectively mounted grating!
The hood must NEVER be used as a support surface unless specifically indicated.
The premises where the appliance is installed must be sufficiently ventilated, when the kitchen hood is used together with other gas combustion devices or other fuels.
The ducting system for this appliance must not be connected to any existing ventilation system which is being used for any other purpose such as discharging exhaust fumes from appliances burning gas or other fuels.
The flaming of foods beneath the hood itself is severely prohibited.
The use of exposed flames is detrimental to the filters and may cause a fire risk, and must therefore be avoided in all circumstances.
Any frying must be done with care in order to make sure that the oil does not overheat and ignite.
Accessible parts of the hood may became hot when used with cooking applicance.
With regards to the technical and safety measures to be adopted for fume discharging it is important to closely follow the regulations provided by the authorised authorities.
The hood must be regularly cleaned on both the inside and outside (AT LEAST ONCE A MONTH).
This must be completed in accordance with the maintenance instructions provided in this manual). Failure to follow the instructions provided in this user guide regarding the cleaning of the hood and filters will lead to the risk of fires.
Do not use or leave the hood without the lamp correctly mounted due to the possible risk of electric shocks.
We will not accept any responsibility for any faults, damage or fires caused to the appliance as a result of the non-observance of the instructions included in this manual.
This appliance is marked according to the European directive 2002/96/EC on Waste Electrical and Electronic Equipment (WEEE). By ensuring this product is disposed of correctly, you will help prevent potential negative consequences for the environment and human health, which could otherwise be caused by inappropriate waste handling of this product.

The symbol ▬ on the product, or on the documents accompanying the product, indicates that this appliance may not be treated as household waste. Instead it should be taken to the appropriate collection point for the recycling of electrical and electronic equipment. Disposal must be carried out in accordance with local environmental regulations for waste disposal.

Use

The hood is designed to be used either for exhausting or filter version.

Ducting version

In this case the fumes are conveyed outside by means of a special pipe connected with the connection ring located on top of the hood.
Attention! The exhausting pipe is not supplied and must be purchased apart.
Diameter of the exhausting pipe must be equal to that of the connection ring.
In the horizontal runs the exhausting pipe must be slightly slanted (about 10°) and directed upwards to vent the air easily from the room to the outside.
Attention! If the hood is supplied with active charcoal filter, then it must be removed.
Connect the hood and discharge holes on the walls with a diameter equivalent to the air outlet (connection flange).
Using the tubes and discharge holes on walls with smaller dimensions will cause a diminution of the suction performance

and a drastic increase in noise.
Any responsibility in the matter is therefore declined.

- ! Use a duct of the minimum indispensible length.
- ! Use a duct with as few elbows as possible (maximum elbow angle: 90°).
- ! Avoid drastic changes in the duct cross-section.
- ! Use a duct with an as smooth as possible inside.
- ! The duct must be made of certified material.

Filter version

One active charcoal filter is needed for this and can be obtained from your usual retailer.
The filter removes the grease and smells from the extracted air before sending it back into the room through the upper outlet grid.

The models with no suction motor only operate in ducting mode, and must be connected to an external suction device (not supplied).
The connecting instructions are supplied with the peripheral suction unit.

Installation

The minimum distance between the supporting surface for the cooking equipment on the hob and the lowest part of the range hood must be not less than 50cm from electric cookers and 65cm from gas or mixed cookers.
If the instructions for installation for the gas hob specify a greater distance, this must be adhered to.

Electrical connection

The mains power supply must correspond to the rating indicated on the plate situated inside the hood. If provided with a plug connect the hood to a socket in compliance with current regulations and positioned in an accessible area, after installation. If it not fitted with a plug (direct mains connection) or if the plug is not located in an accessible area, after installation, apply a double pole switch in accordance with standards which assures the complete disconnection of the mains under conditions relating to over-current category III, in accordance with installation instructions.
Warning! Before re-connecting the hood circuit to the mains supply and checking the efficient function, always check that the mains cable is correctly assembled.
The hood is provided with a special power cable ; if the cable is damaged, request a new one from Technical Service.

Mounting

Expansion wall plugs are provided to secure the hood to most types of walls/ceilings. However, a qualified technician must verify suitability of the materials in accordance with the type of wall/ceiling. The wall/ceiling must be strong enough to take the weight of the hood. **Do not tile, grout or silicone this appliance to the wall. Surface mounting only.**

Operation

Use the high suction speed in cases of concentrated kitchen vapours. It is recommended that the cooker hood suction is switched on for 5 minutes prior to cooking and to leave in operation during cooking and for another 15 minutes approximately after terminating cooking.

1. **Lights ON/OFF**
2. **Motor ON/OFF**
   When key **"2"** is pressed the motor passes to speed 1.
   If the key is pressed during working, the hood passes to **OFF** state.
3. **Speed decrease**
   When key **"3"** is pressed the speed decreases from 4 (intense) to 1.
4. **Speed increase**
   When key **"4"** is pressed with the hood in **OFF** state, the hood passes to speed 1.
   If the key is pressed during working, the speed increases from 1 to 4 (intense).
   The intense speed is timed. The standard timing is 5', at the end of which the hood sets at speed 2.
   To deactivate the function before the end of the time, press key **"3"**, the hood sets at speed 3, when key **"2"** is pressed the hood turns off.
   A signal on the display corresponds to each speed:
   OFF: No signal
   Speed 1: **1**
   Speed 2: **2**
   Speed 3: **3**
   Speed 4: **4** flashing
5. **Display**

Grease filter signalling
The grease filter is signalled by the display with number 1 flashing after 40 hours of use.
This means that the grease filter needs to be washed.
The signalling is visible with the hood in **ON** state.
To eliminate the grease filter signalling, press key **"2"** for more than 3", until it turns off.
The signalling can be eliminated with the hood in **ON** state.

Carbon filter signalling (only for filtering version)
The carbon filter is signalled by the display with number 2 flashing after 160 hours of use.
This means that the grease filter installed must be replaced.
The signalling is visible with the hood in **ON** state.
To eliminate the carbon filter signalling, press key **"2"** for more than 3", until it turns off.
The signalling can be eliminated with the hood in **ON** state.

In case both filters are signalled at the same time, numbers 1 and 2 flash on the display alternately.
The signalling can be reset by carrying out the above-described procedure twice.
First it resets the grease filter signalling, then the carbon filter signalling.

In the standard mode the carbon filter signalling is not active.
In case the filtering version hood is used, it is necessary to enable the carbon filter signalling.

Activation of carbon filter signalling:
Set the hood to **OFF** and keep keys **"2"** and **"3"** pressed contemporaneously for 3".
Numbers 1 and 2 flash alternately for 2".
Deactivation of carbon filter signalling:
Set the hood to **OFF** and keep keys **"2"** and **"3"** pressed contemporaneously for 3".
Number 1 flashes for 2".

Temperature Alarm
The hood is equipped with a temperature sensor which activates the motor at speed 3 in case the temperature in the display zone is too high.
The alarm condition is indicated by the display with the letter **t** flashing.
This condition remains as such until the temperature falls below the alarm threshold.
This mode can be quit by pressing key **"2"**, **"3"** or **"4"**.
Every 30" the sensor checks the ambient temperature of the display zone.

Display Symbols

Symbol	State
	Speed 1
	Speed 2
	Speed 3
	Speed 4 (intense)
	Grease filter maintenance
	Carbon filter maintenance
	Grease filter and carbon filter maintenance
	Temperature Alarm

Maintenance

ATTENTION! Before performing any maintenance operation, isolate the hood from the electrical supply by switching off at the connector and removing the connector fuse.
Or if the appliance has been connected through a plug and socket, then the plug must be removed from the socket.

Cleaning

The cooker hood should be cleaned regularly (at least with the same frequency with which you carry out maintenance of the fat filters) internally and externally. Clean using the cloth dampened with neutral liquid detergent. Do not use abrasive products. **DO NOT USE ALCOHOL!**
WARNING: Failure to carry out the basic cleaning recommendations of the cooker hood and replacement of the filters may cause fire risks.
Therefore, we recommend oserving these instructions.
The manufacturer declines all responsibility for any damage to the motor or any fire damage linked to inappropriate maintenance or failure to observe the above safety recommendations.

Grease filter

Fig. 9-24
Traps cooking grease particles.
This must be cleaned once a month (or when the filter saturation indication system – if envisaged on the model in possession – indicates this necessity) using non aggressive detergents, either by hand or in the dishwasher, which must be set to a low temperature and a short cycle.
When washed in a dishwasher, the grease filter may discolour slightly, but this does not affect its filtering capacity.
To remove the grease filter, pull the spring release handle.

Charcoal filter (filter version only)

Fig. 23
It absorbs unpleasant odours caused by cooking.
The saturation of the activated charcoal occurs after more or less prolonged use, depending on the type of cooking and the regularity of cleaning of the grease filter.
In any case it is necessary to replace the cartridge at least every four mounths (or when the filter saturation indication system – if envisaged on the model in possession – indicates this necessity).
Remove the grease filters.
Fit the charcoalfilters over the motor.
Align the **pins R** on the cowl with the **slots S**, then turn the filter clockwise until it locks in place.
Reverse the above procedure to remove the charcoal filters.
Refit the grease filters.

Replacing lamps

Fig. 25
Disconnect the hood from the electricity.
Warning! Prior to touching the light bulbs ensure they are cooled down.

Model with halogen light bulbs.

1. Using a flat head screwdriver or equivalent tool, carefully pry loose the light cover.
2. Remove the damaged light and replace with a new **12 Volt, 20 Watt** (Maximum) halogen light made for a **G-4 base** SUITABLE FOR USE IN OPEN LUMINAIRES. Follow package directions and do not touch new light with bare hands.
3. Reinstall the light cover. (it will snap shut).

Model with incandescent light bulbs:

1. Remove the grease filters .
2. Replace faulty bulbs, always using new bulbs of **max. 40 W (E14).**
3. Refit the grease filters.

If the lights do not work, make sure that the lamps are fitted properly into their housings before you call for technical assistance.